INSTRUCTIONS FOR USE (IFU)

Derma Glue (Tissue Adhesive)

This document serves as the official technical Guidance and Instructions for Use for DERMA GLUE (Models: DG-100, DG-200, DG-300).

1. General Device Description

DERMA GLUE is a sterile, liquid topical skin adhesive mainly composed of n-Butyl-Cyanoacrylate. When applied to cleaned surgical skin incisions or traumatic laceration sites, the liquid reacts with skin moisture to polymerize within minutes into a thin, flexible film layer. This film securely holds skin edges together while protecting the wound area from external contaminants and moisture.

2. Product Models & Specifications

Model Name	Net Volume / Capacity	Packaging Unit	Primary Container
DG-100	0.4 mL, 0.5 mL	Manufacturer Package Unit	Glass Ampoule/Container
DG-200	0.7 mL, 0.8 mL	Manufacturer Package Unit	Glass Ampoule/Container
DG-300	1.0 mL	Manufacturer Package Unit	Glass Ampoule/Container

2-1. Shape and Structure-Appearance

2-1-1. Appearance

DG-100,200,300



2-1-2. Appearance Description

Picture		
 ①	 ②	
① - 1 (Paper cap) 	① - 2 (Cover) 	① - 3 (Glass ampoule) 

Description of appearance	①-1 Paper cap	A cap covering the upper part
	①-2 Cover	Protective cover for glass ampoule
	①-3 Glass ampoule	A container that holds contents

3. Raw materials or ingredients and quantities (medical products)

3.1 Liquid Adhesive Content

No	Part name		Raw material name	Standard No	Weight (%)	Whether there is human contact
1	Tissue Adhesive		n-Butyl-Cyanoacrylate	Own standard 1	99.9	contact (rupture or trauma surface) Adhesive
2			Cellulose	Own standard 2	0.09	contact (rupture or trauma surface) Thickener
3			D&C Violet #2	Own standard 3	0.01	contact (rupture or trauma surface)
4	Container	Paper Cap	Paper	Own standard 4	100	Liquid and non-contact
5		Cover	Polypropylene	Own standard 5	100	Liquid and non-contact
6		Glass Ampoule	Glass	Own standard 6	100	Indirect contact

1. [Company Specification 1] n-Butyl-cyanoacrylate $C_8H_{11}NO_2$

-CAS NO. 6606-65-1

-Appearance: Liquid

-Flash point: >83 ℃

-Specific gravity: 1.05

-Viscosity: 5-100cPs

2. [Company standard 2] Cellulose

-CAS NO. 9004-34-6

-Appearance: White powder

-Molecular weight: 152.15 g/mole

-Melting point/freezing point: 125~131°C.

-Flash point: 116.39 °C

3. [Company standard 3] D & C Violet #2

-CAS NO.: 81-46-1

-Molecular formula: C21H15NO3

-Molecular weight: 413

-Specific gravity: 1.49

-Specific gravity: 1.665 at 20 ℃

4. [Company Specification 4] Paper

-CAS NO.: 65996-61-4

-Melt/Freezing Point: 85-100℃

-Flash Point: 85℃

-Specific Gravity: 0.91-0.97

5. [Company Specification 5] Polypropylene
-CAS NO.: 9003-07-0
-Melt/Freezing Point: 150-170℃
-Density: 0.89~0.91 g/㎤

6. [Company Specification 6] Glass
-CAS NO: 65997-17-3
-Softening Point (107.6 dPa • s) 785°C
-Expansion Coefficient(300°C)55(X10-7)/ °C
-Density: 2.33 g/㎤

4. Intended Purpose / Indications for Use

Indicated for local topical approximation and bonding of skin edges on surgical incision wounds, lacerations, or simple clean traumatic wounds.

5. Technical Performance Specifications

Performance Test Parameter	Acceptance Criteria
Peel Adhesion Strength (ASTM F2256)	≥ 0.3 N/㎝
Lap Shear Strength (ASTM F2255)	≥ 0.06 MPa
Tensile Strength (ASTM F2258)	≥ 0.06 MPa
Wound Closure Strength (ASTM F2458)	≥ 3N
Polymerization Time	Peak temperature reached within 60 seconds
Polymerization Heat (Exotherm)	Maximum temperature 60℃ Max.
Waterproofness (EN 13726-3)	Water penetration strictly prevented

6. Method of Application (Directions for Use)

1. **Pre-application Check:** Verify package integrity and shelf life prior to opening. Do not use if the sterile barrier is damaged or expired.
2. **Wound Preparation:** Ensure complete hemostasis, clean, and thoroughly dry the wound site prior to application. Decontaminate wound surfaces if required.
3. **Opening:** Remove the single-use sterile container from the package and remove the cap.
4. **Wound Cleaning & Drying:** Clean and disinfect the wound and surrounding skin using sterile saline. Completely dry the skin surface with alcohol or sterile gauze, as remaining moisture or oils reduce adhesion.
5. **Skin Edge Approximation:** Using fingers or forceps, gently bring the wound edges together so they align evenly without gaps. Ensure adhesive is applied only to the top layer of the skin and does not seep into the internal wound bed.

6-1. Applicator Preparation & Application Method



1.Uncap & Re-position: Remove the paper cap from the top of the container and attach it to the bottom.



2. Crush Ampoule: Squeeze the center of the applicator firmly to crush the inner glass ampoule.



3.Prime Filter Tip: Tilt the device downward and gently squeeze to allow the liquid adhesive to flow into the applicator filter tip.

4. Apply Adhesive (2–3 Thin Layers):

- Gently press the tip against the skin and apply a thin, uniform layer directly along the wound line.
- Allow each layer to dry for 30~60 seconds.
- Repeat application 2~3 times, extending the coverage 3~5 cm around the wound margin to form a protective film layer.

5. Drying & Curing Process

Keep the wound area completely still and immobilized for 1 to 2 minutes following application.

Once fully cured, the adhesive forms a hard, transparent-to-bluish protective film layer.

6-2. Precautions & Post-Care Instructions

- **Avoid Internal Seepage:** Use exclusively on the superficial skin surface. Seepage into deeper tissues may trigger foreign-body reactions or inflammation.
- **Dressing Exemption:** The cured adhesive layer serves as a waterproof barrier; additional gauze or bandages are generally not required.
- **Water Contact:** Light showering is permissible, but avoid rubbing the site or soaking in water (e.g., baths, swimming).
- **Natural Sloughing:** The film layer will naturally peel off within 7 to 14 days as the skin heals. Do not scratch, pick, or forcibly remove the film.
- **Avoid Topical Ointments:** Do not apply ointments, creams, or oils over the adhesive, as they can dissolve or detach the protective film.

7. Contraindications, Warnings & Precautions

7.1 Contraindications

- **External Surface Use Only:** Strictly prohibited for internal organs, mucosal surfaces, or deep tissue placement. Exothermic polymerization may cause thermal injury or tissue reaction.
- **Ophthalmic Contact:** Do not apply near or into the eyes.
- **Infected Wounds:** Do not apply over active infections, gangrene, or necrotic tissue.
- **Hypersensitivity:** Contraindicated in patients with known sensitivity to cyanoacrylate compounds or formaldehyde.

7.2 Warnings

- Single-use medical device; do not re-use, re-process, or re-sterilize. Re-sterilization severely compromises adhesive integrity and biocompatibility.
- Operators must thoroughly read and understand the IFU prior to use to prevent severe patient injury.

7.3 Precautions

- To be applied only by qualified healthcare professionals in accordance with local regulations.
- Avoid excessive pressure on the applicator nozzle to prevent liquid adhesive from entering inside the wound margins. Apply smoothly and lightly.
- Avoid application over high skin tension joints (e.g., finger joints, elbows, knees) or areas subject to continuous friction or moisture.
- Instruct patients not to pick, scratch, or peel off the polymer film layer.
- Keep out of reach of children.

8. Storage Conditions, Shelf Life & Sterilization

Storage Temperature: Storage Instructions

(1) Store at 0~20°C.

(2) Do not store in hot or humid places.

(3) Avoid direct sunlight.

(4) Store in an airtight container to prevent exposure to air.

(5) Shelf Life: 24 months from the date of manufacture.

(6) Sterilization Method: Ethylene Oxide (EO) Sterilization (validated per ISO 11135).

9. Test Specifications (Test Standards)

1. Biological Safety Test

- Conforms to the [Common Standards for Biological Safety of Medical Devices].

2. Performance Tests

2-1) Physical and Chemical Properties Tests

2-2) Finished Product

No	Test Item	Test Acceptance Criteria	Test Method
1	**Appearance**	When inspected visually, there shall be no damage, foreign matter, or contamination.	Visual inspection.
2	**Dimensions (Volume)**	Shall be within 90% or more of the labeled volume.	Measure using an electronic balance.
3	**Viscosity**	≤10	Measure viscosity using a rotational viscometer (Test conditions: Brookfield Viscometer, LV type, Spindle No. 18, 100 r/min).
4	**Formaldehyde Emission Test**	≤350 mg/kg	Tested according to the Standard Test Procedure for Household Chemical Products – Aldehydes by GC-MS. Cured sample eluted with distilled water in a water bath at 50°C, 50 rpm for 15 days, followed by ultrasonic extraction for 60 min. Derivatization done with PFBHA solution, extracted with Hexane, and analyzed via GC-MSTesting for aldehydes in household chemical products is conducted using gas chromatography/mass spectrometry (GC-MS). After solidifying the sample, add distilled water and allow it to elute in a constant-temperature water bath at 50°C and 50 rpm for 15 days. Subsequently, perform additional extraction using ultrasonication for 60 minutes. Transfer the eluate to a 50 mL separatory funnel, add 50 mg of potassium hydrogen phthalate, and shake to dissolve. Add a pentafluorobenzyl hydroxylamine solution and allow the derivatization reaction to proceed at room temperature for 30 minutes. Then, add 4 mL of hexane extraction solvent, shake vigorously for 5 minutes, and allow the layers to separate. Collect the solvent layer, combine it in a vial containing 3 mL of 0.2 N sulfuric acid solution, shake for 30 seconds, and let it stand for 5 minutes to allow phase separation, finally, collect the solvent layer and analyze it using GC-MS

2-3) Contents

Sample Thickness & Form	Surface Area (Both Sides) or Weight	Extraction Solvent Volume	Elution Conditions
≤ 0.5 mm	120 ㎠	20 mL	37℃, 72Hr

* For the extractables test, prepare and pretreat the sample by coating it onto glass using the following method prior to testing

* **Pretreatment conditions:** Prepare the test specimen by coating both sides of the glass with the product to a thickness of 100um or less, and then drying it at room temperature for at least 30 minutes.

contents

No	Test Item	Test Acceptance Criteria	Test Method
1	Heavy Metals	Must not be darker than the control solution.	Weigh 1 g of the sample and test according to Method 2 of the Heavy Metals Test under the General Tests of the Korean Pharmacopoeia. Use 2.0 mL of Lead Standard Solution as the control solution.
2	pH	pH difference≤1.5	1. Transfer 15 mL each of the test solution and blank solution into separate beakers. 2. Add 1.0 mL of potassium chloride solution (prepared by dissolving 1.0 g of potassium chloride in water to make 1000 mL) to each beaker. 3. Measure the pH of both solutions and calculate the difference.

Performance Test

No	Test Item	Test Standard	Test Method
1	tensile strength	Test method based on ASTM F2258-05 Must be 0.06 MPa or higher	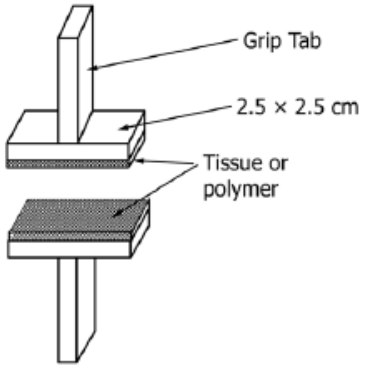 Test Procedure 1) Secure the porcine skin specimen (25mm x 25mm, thickness <5mm) onto the grip tab using cyanoacrylate adhesive (instant glue). 2) Wrap the entire specimen fixed on the grip tab with gauze soaked in 1X PBS solution, place it in a zipper bag, and heat-treat in a water bath at 37℃ for 60 (±15)minutes. 3) After heat treatment, stabilize the specimen inside the zipper bag at room temperature for 15minutes.Take out the two specimens and wipe off moisture using fresh, dry gauze. 4) Spread 50μL of Derma Glue over the entire surface of one specimen, then bond the other specimen onto it. 5) Use a press to apply a force of 2 N for 5 minutes to ensure proper bonding. 6) Measure the tensile strength at a speed of 2 mm/min. 7) Calculate the value in MPa by dividing the maximum force applied by the bonding area (625 mm^2). * Before testing, keep the porcine skin and PS samples hydrated with 1X PBS.

No	Test Item	Test Standard	Test Method
2	T-Peel	Test method based on Standard Test Method ASTM F2256-24 0.3N or higher	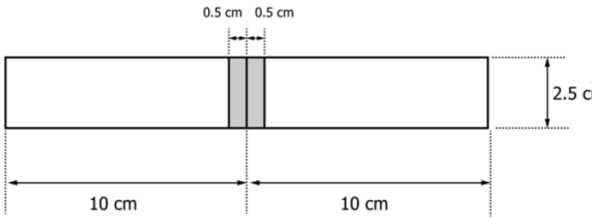 Test Procedure 1) Prepare the porcine skin specimen (25 mm x 100 mm, thickness 5 mm) (Store the specimen in 1 X PBS before testing to prevent it from drying out.) 2) Wrap the porcine skin specimen with gauze moistened with 1 X PBS solution, place it in a zipper bag, and immerse it in a 37℃ water bath for 60 (± 15) minutes. 3) After incubation, stabilize the specimen inside the zipper bag at room temperature for 15 minutes, then remove the two specimens and wipe off excess moisture with fresh, dry gauze. 4) Apply petroleum jelly (Vaseline) to the sides of the specimen to prevent unwanted bonding. 5) Place the two specimens edge-to-edge, and spread 100 µL of the sample over a length of 5 mm on each specimen as shown in the figure. 6) Fix the remaining parts of the specimens into the tensile testing machine, excluding a 50 mm section centered on the bonded area. 7) Measure the tensile strength at a crosshead speed of 50 mm/min. 8) Record the maximum force.

5.1

No	Test Item	Test Standard	Test Method
3	Lap Shear	ASTM F2255-24 Standard Test Method 0.06 MPa or higher	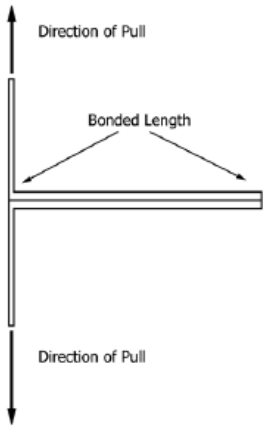 Test Procedure 1) Prepare the porcine skin specimen (25 mm x 150 mm, thickness≤5 mm). (Store the specimen in 1 X PBS before testing to prevent it from drying out.) 2) Wrap the porcine skin specimen with gauze moistened with 1 X PBS solution, place it in a zipper bag, and immerse it in a 37℃ water bath for 60 (± 15) minutes. 3) After incubation, stabilize the specimen inside the zipper bag at room temperature for 15 minutes, then remove the two specimens and wipe off excess moisture with fresh, dry gauze. 4) Apply petroleum jelly (Vaseline) to the sides of the specimen to prevent unwanted bonding. 5) Spread 250 µL of the sample evenly over the bonding area (25 mm x 1250 mm) of one specimen. 6) Overlap the other specimen, then place a 1000 g weight on top to apply a compressive force of 10 N for 5 minutes. 7) Measure the tensile strength at a crosshead speed of 250 mm/min. 8) Exclude the data collected before 2.5 cm. and calculate the average from 2.5 to 22.5 cm.

No	Test Item	Test Standard	Test Method
4	Shear strength	ASTM F2255-05 Standard Test Method 0.06 MPa or higher	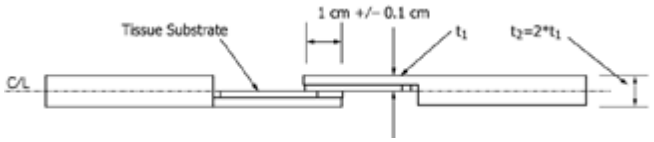 Test Procedure 1) Prepare the porcine skin specimen (25 mm x 150 mm, thickness≤5 mm). (Store the specimen in 1X PBS before testing to prevent it from drying out.) 2) Wrap the porcine skin specimen with gauze moistened with 1X PBS solution, place it in a zipper bag, and immerse it in a 37℃ water bath for 60 (± 15) minutes. 3) After incubation, stabilize the specimen inside the zipper bag at room temperature for 15 minutes, then remove the two specimens and wipe off excess moisture with fresh, dry gauze. 4) Apply petroleum jelly (Vaseline) to the sides of the specimen to prevent unwanted bonding. 5) Spread 250 µL of the sample evenly over the bonding area (25 mm x 150 mm) of one specimen. 6) Overlap the other specimen, then place a 1000 g weight on top to apply a compressive force of 10 N for 5 minutes. 7) Measure the tensile strength at a crosshead speed of 250 mm/min. 8) Exclude the data collected before 2.5 cm. and calculate the average from 2.5 to 22.5 cm.

No	Test Item	Test Standard	Test Method
5	Curing Time	When tested according to the specified test method, the time required for the heat of polymerization to reach its peak temperature shall be within 60 seconds.	Test Procedure 1)Prepare a 100X L-histidine solution by adding 0.1 g of L-histidine to 10 mL of 1X PBS solution. 2) Prepare a 1X L-histidine (0.1 g/L) solution by diluting 100 µL of the prepared 100x L-histidine solution 1: 100 with 1X PBS (9.9 mL) solution. 3) Add 20 µL of the 1X L-histidine solution into a 1.5 mL EP tube, and then add 50 µL of the sample, (Ensure that the adhesive is added accurately into the L-histidine solution without adhering to the inner wall of the tube.) 4) Mix for 3 seconds using an ultrasonic cleaner, and immediately insert a thermocouple into the solution to measure the polymerization temperature. (This moment shall be defined as the start time of the measurement.) 5 Record the time required to reach the peak temperature.

No	Test Item	Test Standard	Test Method
6	Heat of Polymerization	When tested according to the specified test method, the heat of polymerization (peak temperature) shall be 60 ℃ or less.	Test Procedure 1)Prepare a 100X L-histidine solution by adding 0.1 g of L-histidine to 10 mL of 1X PBS solution. 2) Prepare a 1X L-histidine (0.1 g/L) solution by diluting 100 µL of the prepared 100X L-histidine solution 1: 100 with 1X PBS (9.9 mL) solution. 3) Add 20 µL of the 1X L-histidine solution into a 1.5 mL EP tube, and then add 50 µL of the sample. (Ensure that the adhesive is added accurately into the L-histidine solution without adhering to the inner wall of the tube.) 4) Mix for 3 seconds using an ultrasonic cleaner, and immediately insert a thermocouple into the solution to measure the polymerization temperature. (This moment shall be defined as the start time of the measurement.) 5) Record the peak temperature.